Conventional oven 5F single–phase + rotating spit motor (Optional) + cooling fan motor
Mod. Omologation: A(–)S5(–)0T

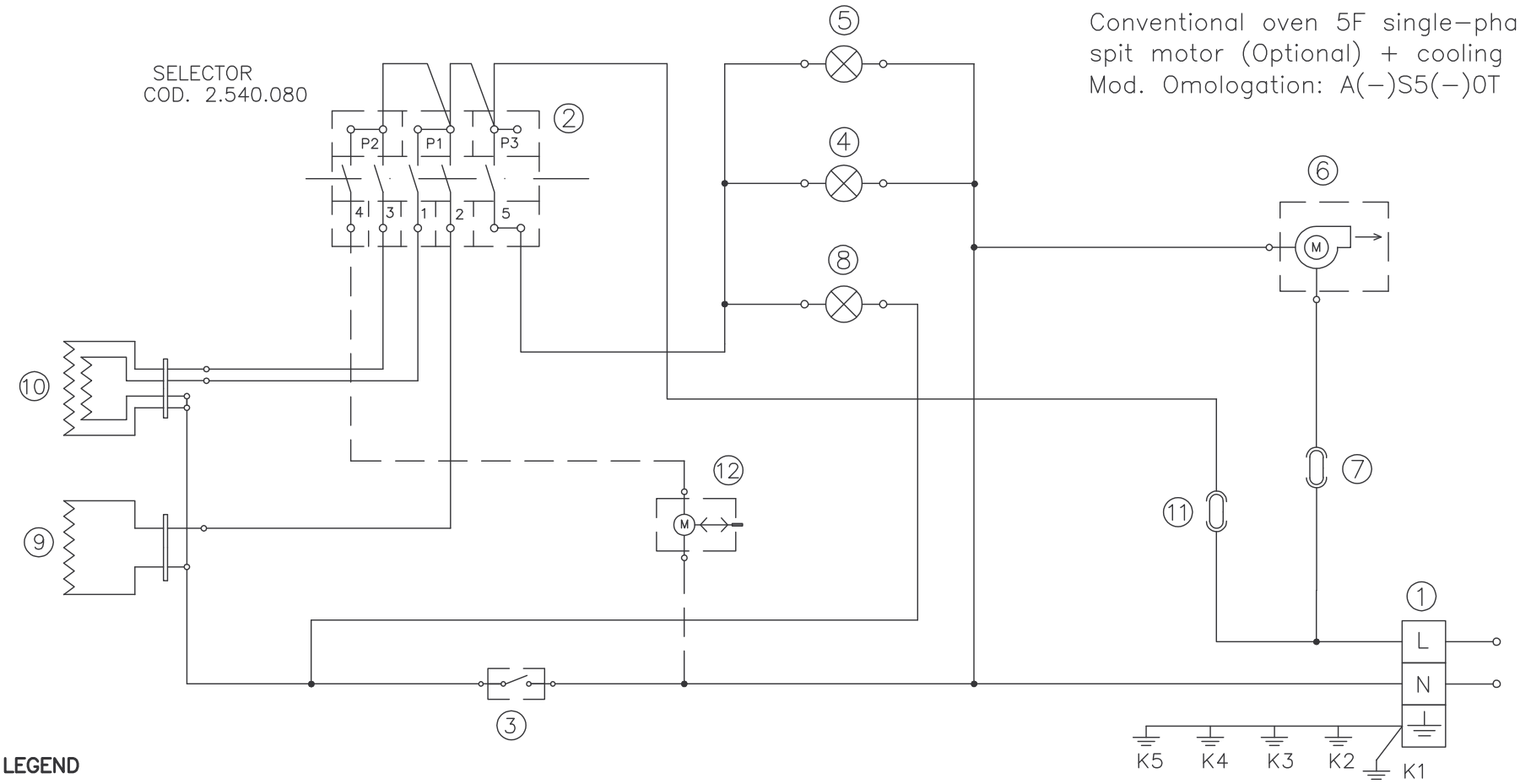

WIRING COD. 42.750.005
42.750.034

LEGEND

1– Supply terminal
2– Selector
3– Oven thermostat
4– Pilot lamp selector
5– Oven light
6– Cooling fan motor
7– Thermostat start cooling fan
8– Pilot lamp thermostat
9– Botton heating element
10– Upper+grill heating element
11– Thermal cut–out
12– Rotating spit motor (Optional)

K1– Earth appliance
K2– Earth rotating spit motor(Optional)
K3– Earth upper heating element
K4– Earth lamp holder
K5– Earth thermostat

ALL OF THE DIMENSIONS DO NOT TAKE CARE OF FINISHING

GENERAL TOLERANCES: LENGHT, ANGLES, HOLES

	ELECTRICAL DIAGRAM CONVENTIONAL 5F		
	DENOMINATION	MATERIAL	CONDITION
		DRAWN PELLIZZARI S.	
		DERIVED FROM	
A	ENGLISH TRANSLATION	PELLIZZARI	MOD. FS50C
PS	MODIFICATIONS	SIGNATURE	

OCEAN® MS4FI

COD. 2.800.018

FORMAT A3H